WATERSTAGE

Document n° 1408-2 ~ 26/07/2010

EN FR NL DE

Control Box

UTW-SCB*A

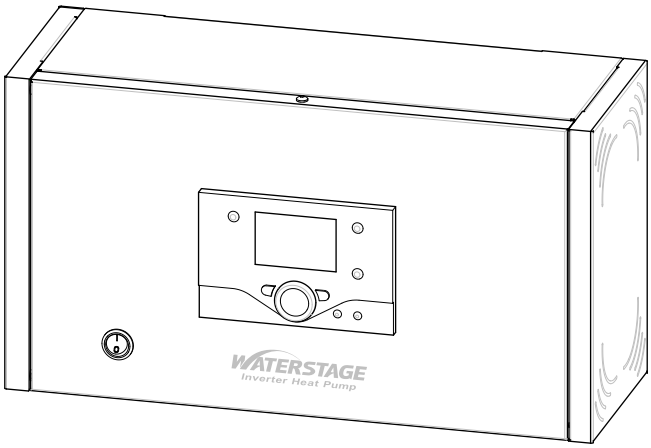

Operation manual

intended for professionals and end users

To be saved for
future consultation

Fujitsu General (Euro) GmbH
Werftstrasse 20
40549 Düsseldorf - Germany

Contents

Instructions for user 3

Instructions to be read before using the equipment . . 3
Safety instructions 3
Start-up 3
Use 3
Maintenance 3
Precautions and warnings regarding your installation . . 3
Control system 3
The radiators 3
Floor-heating systems 3
Domestic hot water (DHW) 3
User interface, room control unit (option) and room thermostat (option) 4
Quick start-up 6
Programming example 7
Structure of the "End user" control menu 8
Parametering the setting 9
General 9
Setting parameters 9
Information display 11

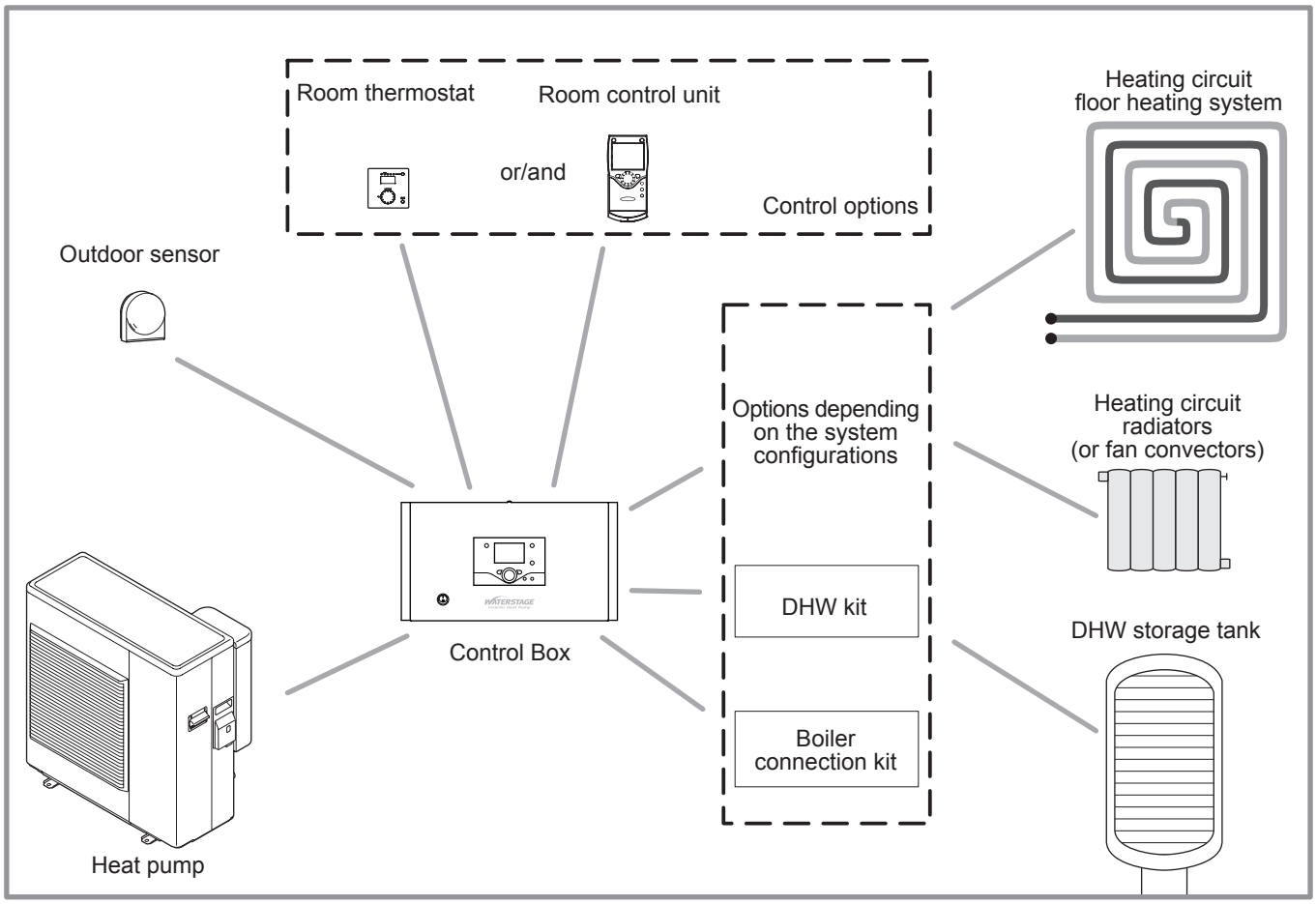

figure 1 - Overall view of the configuration of a complete installation

1 Instructions for user

1.1 Instructions to be read before using the equipment

Please comply with the following instructions in order to avoid any risk of injury or inappropriate use of the appliance.

1.2 Safety instructions

1.2.1 Start-up

- ☞ **Do not switch the appliance on until every fillings have been done.**
- ☞ **The installation must always be connected to the Earth and fitted with a protective circuit breaker.**
- ☞ **Do not modify the electricity supply.**

1.2.2 Use

- ☞ **Do not place any heat source under the control box, room control unit or room thermostat.**

1.2.3 Maintenance

- ☞ **Do not try to repair this appliance yourself.**
- ☞ **This appliance does not contain any components capable of being repaired by the user himself. Removing one or other of the covers can expose you to dangerous electrical voltages.**
- ☞ **In any case, switching off the current is not sufficient to protect you from any external electrical shocks (capacitors).**
- ☞ **Switch off the power supply if there are any abnormal noises, smells or smoke coming from the appliance and contact your installer.**
- ☞ **Switch off the power to the appliance before you clean it.**
- ☞ **Clean all the enamelled panels of the box with a dry or slightly damp soft cloth.**

1.3 Precautions and warnings regarding your installation

1.3.1 Control system

Your installer has carefully adjusted your installation. Do not modify setting parameters without his agreement. If in doubt, do not hesitate to contact him.

The control system for your heating system is designed in flow temperature for the water based on the outdoor temperature (water control). The installation of a room thermostat (option) allows to improve operation of the regulation (the influence of the room temperature is taken into account).

1.3.2 The radiators

To ensure the function of the regulation with room influence, it's necessary that the room in which the room thermostat is installed has no thermostatic valve or that they must be completely open.

1.3.3 Floor-heating systems

- New floor-heating systems require to be initially heated slowly to avoid any problems with cracking. Check with your installer that this initial heating procedure has indeed been performed before using your heating system freely.
- To be efficient, floor-heating systems do not need to be very hot and never should be. At most, the systems should be warm to the touch in cold weather.
- The great stability in a regulation system for floor-heating systems avoids sharp differences in temperature. However, this stability involves a reaction time of the order of several hours, (approx 6 hours).
- Any changes to the setting must be made slowly, leaving the installation time to react. Adjusting the system to exaggerated setting or in an untimely manner always results in significant temperature fluctuations during course of the day.
- Similarly if your dwelling has a floor-heating system, do not reduce the heating or switch it off if you will be absent for a short period. The reheating period is always quite long (approx 6 hours).

1.3.4 Domestic hot water (DHW)

This function is designed as an option through the use of a DHW tank with electrical backup heating.

When the DHW production is required, the heat pump adapts to this demand with higher priority.

No space heating is produced while the domestic hot water is being prepared.

The heat pump produces the domestic hot water, which is then additively heated, if required, by electrical backup heating inside the tank.

To ensure a DHW setting over 45°C, the electrical backup heating or the boiler must be left on.

The electrical backup heating enables anti-legionella cycles to be conducted efficiently.

1.4 User interface, room control unit (option) and room thermostat (option)

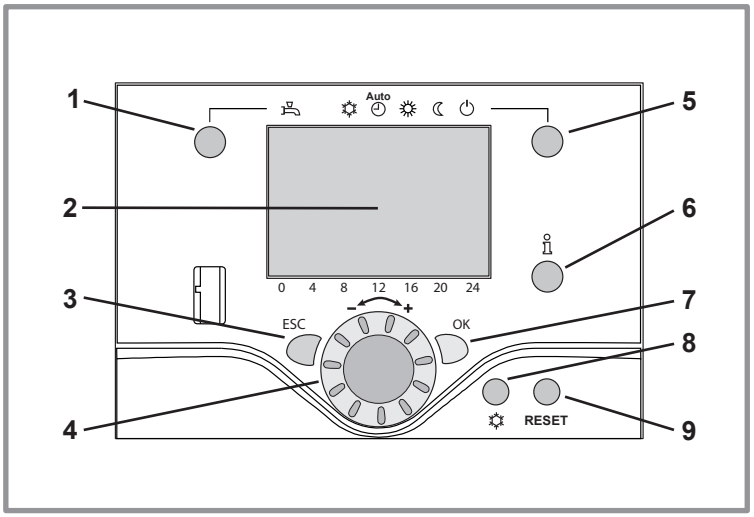

figure 2 - User interface of the control box

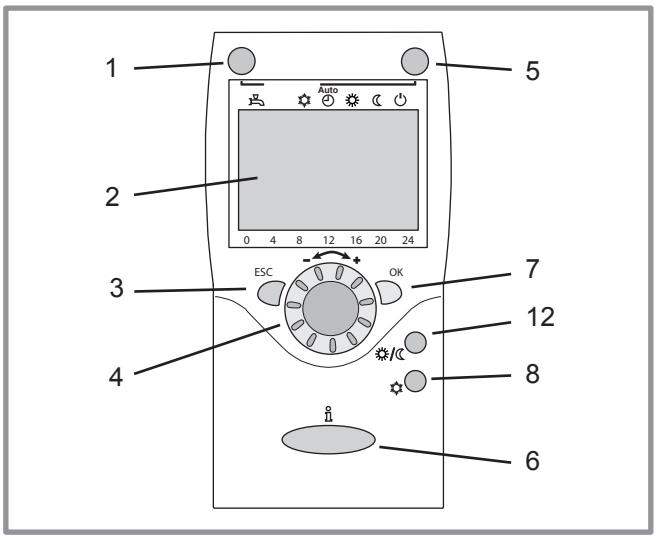

figure 3 - Room control unit (option)

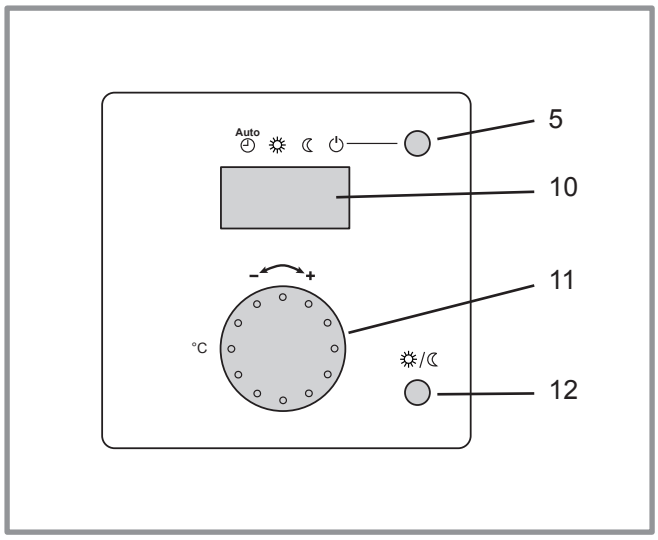

figure 4 - Room thermostat (option)

Ref.	*Function*	*- Definitions*
1	Selecting the DHW operating mode (Domestic hot water) On Off	- If the installation is fitted with a DHW tank. - On : Production of DHW according to the time program. - Off : No domestic hot water heating, anti-frost function is active. - Manual start button : Hold down the DHW key for 3 seconds (Switch from "reduced" to "nominal" until the next time the DHW timer switches over).
2	Digital display	- Operating control, readout of the current temperature, of the heating mode and of any faults . - View the settings.
3	Exit "ESC"	- Quit the menu.
4	Navigation and setting	- Selecting the menu. - Setting parameters. - Adjusting the ambient temperature setpoint.
5	Selecting the heating mode	- Auto Heating operating according to the heating programme (Summer/winter mode switchover is automatic). - Constant comfort temperature. - Constant reduced temperature. - Stand-by mode with anti-frost protection (Provided that the heat pump's electrical power supply is not interrupted).
6	Information display	- Various data (page 12). - Reading error codes. - Information concerning maintenance, special mode.
7	Confirm "OK"	- Input into the selected menu. - Confirmation of the parameter settings. - Confirmation of the adjustment to the comfort temperature setting.
8	Selecting cooling mode Auto	- Cooling operating according to the heating programme (Summer/winter mode switchover is automatic).
9	Reset (hold down the key for 3 sec)	- Reinitialising the parameters and cancelling error messages. - Do not use during normal operation.
10	Digital display	- Operating control, readout of the current temperature, of the heating mode and of any faults .
11	Control knob	- Adjusting the ambient temperature setpoint.
12	Presence key	- Comfort / Reduced switchover.

1.5 Quick start-up

- Close the installation's main circuit breaker.
- Engage the start/stop switch on the control box.
- During the regulator initialisation phase, the display shows all the symbols and then "Data, update" and then "State heat pump".
- Select the "**AUTO**" heating mode.
- Select the **DHW** mode, if the installation is equipped with a DHW tank with electric back-up.

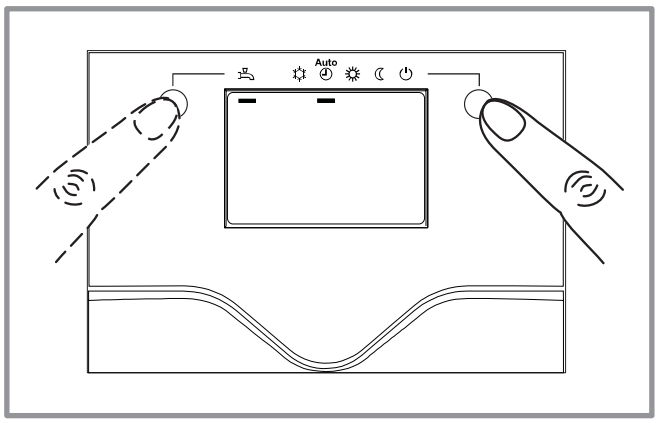

figure 5 - Selecting the heating mode AUTO and selecting the DHW operating mode

- Set the current date and time

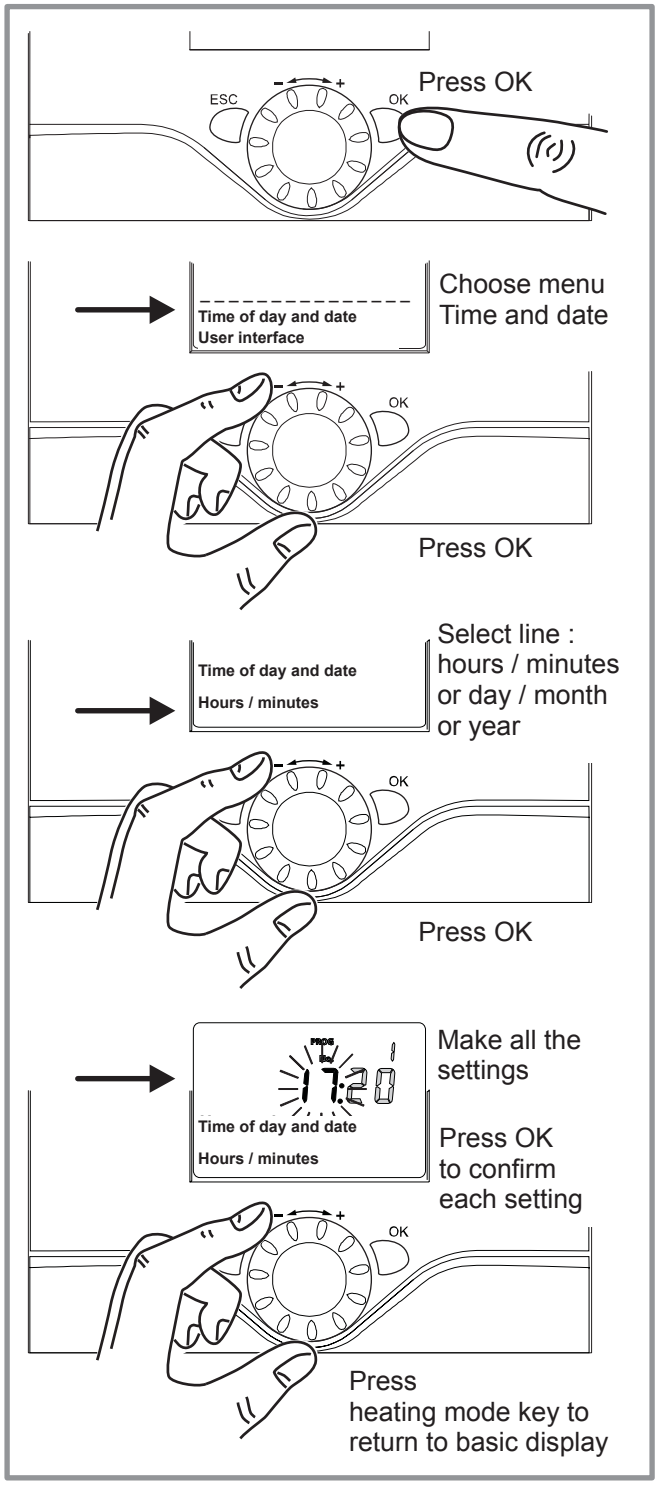

figure 6 - Setting the time and the date

1.6 Programming example

Setting the time

	Keys	Display example	Description
1	ESC OK	INFO 18:28 20.5°C Room setpoint 1	Basic display If the basic display is not shown, press ESC to return to it Press OK
2	OK	PROG Time of day and date User interface	Turn the knob, choose menu : Time and date Press OK to confirm
3	OK	PROG No. 1 18:28 Time of day and date Hours / minutes	Turn the knob, select line 1 : Hours / minutes Press OK to confirm
4	OK	17:28 Time of day and date Hours / minutes	The hour display flashes Turn the knob to set the time Press OK
5	OK	20 Time of day and date Hours / minutes	The minutes display flashes Turn the knob to set the minutes Press OK
6	Auto	PROG No. 1 17:20 Time of day and date Hours / minutes	The setting are recorded Turn the knob to make other settings or Press heating mode key to return to basic display

figure 7 - Programming example

1.7 Structure of the "End user" control menu

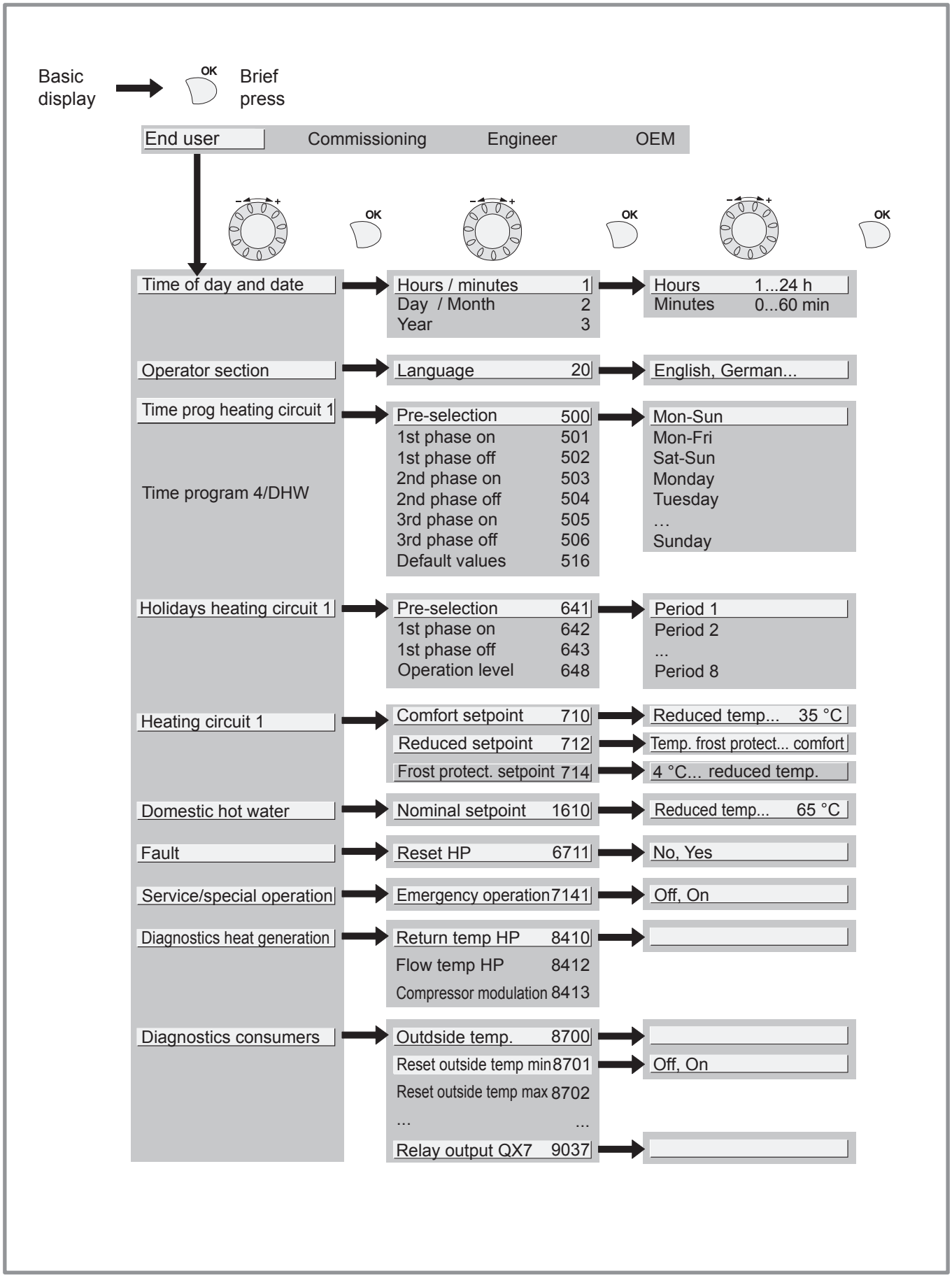

figure 8 - Structure of the "End user" control menu

1.8 Parametering the setting

1.8.1 General

• Only the parameters accessible to level :
End user.
Are described in this section.

• The parameters accessible at levels :
Commissioning level.
Engineer level.
… are described in this section reserved for these professional specialists. **Do not make any modifications to these parameters without advice from these professional specialists.**

1.8.2 Setting parameters

With the screen on basic display.
- Press **OK**.

Once in **"End user" level**
- Scroll the menu list.
- Choose the desired menu.
- Scroll the function lines.
- Choose the desired line.
- Adjust the parameter.
- Check the setting by pressing **OK.**
- To return the menu, press **ESC.**

If no setting is made for 8 minutes, the screen returns automatically to the basic display.

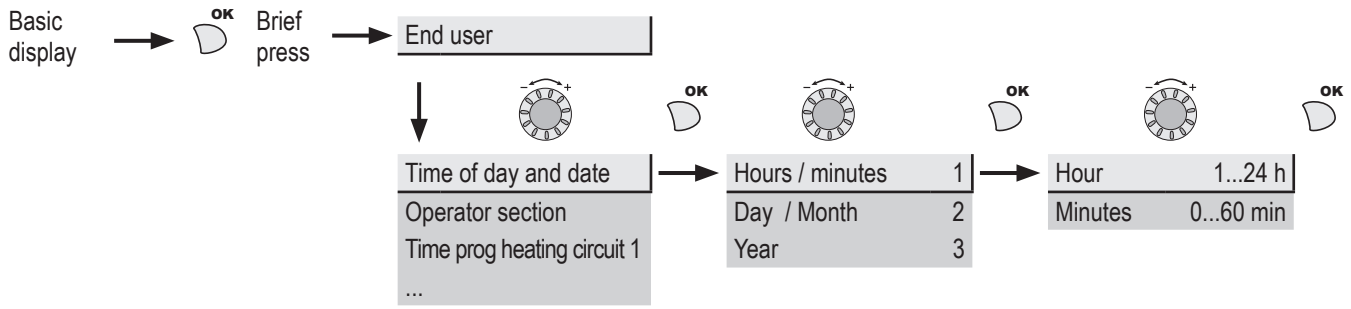

Line	*Function*	*Setting range or display*	*Setting increment*	*Basic setting*
Date and time				
1	Hours / Minutes	00:00... 23:59	1	
2	Day / Month	01.01... 31.12	1	
3	Year	1900... 2099	1	
Operator section				
20	Language	English, Français, Italiano, Nederlands		**English**
Heating time programme, circuit 1				
500	Pre-selection (Day / Week) Mon-Sun Mon-Fri Sat-Sun Monday Tuesday…			**Mon-Sun**
501	1st phase On (start)	00:00... --:--	10 min	**6:00**
502	1st phase Off (end)	00:00... --:--	10 min	**22:00**
503	2nd phase On (start)	00:00... --:--	10 min	**--:--**
504	2nd phase Off (end)	00:00... --:--	10 min	**--:--**
505	3rd phase On (start)	00:00... --:--	10 min	**--:--**
506	3rd phase Off (end)	00:00... --:--	10 min	**--:--**
516	Default values, Circuit 1	No, Yes		**No**
	Yes + OK : The default values memorised in the regulator replace and cancel the customised heating programmes. Your customised settings are therefore lost.			

Line	Function	Setting range or display	Setting increment	Basic setting
Time programme 4 / DHW				
	If the installation is fitted with a DHW tank. (Only with the DHW kit option).			
560	Pre-selection (Day / Week) Mon-Sun Mon-Fri Sat-Sun Monday Tuesday…			**Mon-Sun**
561	1st phase On (start)	00:00... --:--	10 min	**00:00**
562	1st phase Off (end)	00:00... --:--	10 min	**05:00**
563	2nd phase On (start)	00:00... --:--	10 min	**--:--**
564	2nd phase Off (end)	00:00... --:--	10 min	**--:--**
565	3rd phase On (start)	00:00... --:--	10 min	**--:--**
566	3rd phase Off (end)	00:00... --:--	10 min	**--:--**
576	Default values	No, Yes		**No**
	Yes + OK : The default values memorised in the regulator replace and cancel the customised heating programmes. Your customised settings are therefore lost.			
Time programme 5 / Cooling				
600	Pre-selection (Day / Week) Mon-Sun Mon-Fri Sat-Sun Monday Tuesday…			**Mon-Sun**
601	1st phase On (start)	00:00... --:--	10 min	**8:00**
602	1st phase Off (end)	00:00... --:--	10 min	**20:00**
603	2nd phase On (start)	00:00... --:--	10 min	**--:--**
604	2nd phase Off (end)	00:00... --:--	10 min	**--:--**
605	3rd phase On (start)	00:00... --:--	10 min	**--:--**
606	3rd phase Off (end)	00:00... --:--	10 min	**--:--**
616	Default values	No, Yes		**No**
	Yes + OK : The default values memorised in the regulator replace and cancel the customised heating programmes. Your customised settings are therefore lost.			
Holidays, heating circuit 1				
641	Preselection	Period 1 to 8		**Period 1**
642	Start (Day / Month)	01.01... 31.12	1	
643	End (Day / Month)	01.01... 31.12	1	
648	Operating level (during the holidays)	Frost protection, Reduced		**Frost protection**
Heating, circuit 1				
710	Comfort heating setpoint	from reduced setpoint to 35°C	0,5 °C	**20 °C**
712	Reduced setpoint	from frost protection setpoint… to comfort setpoint	0,5 °C	**18 °C**
714	Frost protection setpoint	from 4°C… to reduced setpoint	0,5 °C	**8 °C**
Cooling circuit 1				
901	Operating mode	Off, Automatic		**Off**
902	Comfort cooling setpoint	17... 40 °C	0,5 °C	**24 °C**
907	Release	24h/day, Time program HC, Time program 5 / Cooling		**Time program 5**
	If the installation is fitted with a DHW tank, set the parameter 907 to " Time program 5 / Cooling" (In order to activate cooling only during the day and leave the DHW system to operate during the night).			

Line	*Function*	*Setting range or display*	*Setting increment*	*Basic setting*
Domestic Hot Water (Only with the DHW kit option)				
1610	Nominal setpoint	Reduced setting (line 1612)… to 65 °C	1	**50 °C**
	The backup electrical system is required to reach this level.			
1612	Reduced setpoint	8 °C... to Nominal setpoint (line 1610)	1	**25 °C**
Swimming pool (Only with swimming pool kit option)				
2056	Setpoint source heating	8... 35 °C		**22 °C**
Fault				
6711	Reset HP	No, Yes		**No**
Service / Special operation				
7141	Emergency operation	Off, On		**Off**
	Off : The heat pump does not use the boiler connection when a fault occurs (error 370). On : The heat pump uses the boiler connection when a fault occurs (error 370). In the "On" position, the energy costs can be onerous if the error is not eliminated.			
Diagnostics heat generation				
8410	Return temp HP	0... 140 °C		
	Setpoint (return) HP	0... 140 °C		
8412	Flow temp HP	0... 140 °C		
	Setpoint (flow) HP	0... 140 °C		
8413	Compressor modulation	0... 100%		
Diagnostics consumers				
8700	Outdside temperature	-50... 50 °C		
8701	Outside temp min Reset ? (No, Yes)	-50... 50 °C		
8702	Outside temp max Reset ? (No, Yes)	-50... 50 °C		
8740	Room temperature 1	0... 50 °C		**20 °C**
	Room setpoint 1	4... 35 °C		**20 °C**
8743	Flow temperature 1	0... 140 °C		**50 °C**
	Flow temperature setpoint 1	0... 140 °C		**50 °C**
8756	Flow temp cooling 1	0... 140 °C		**0**
	Flow temp setpoint cooling 1	0... 140 °C		**0**
8830	DHW (domestic hot water) temperature	0... 140 °C		
	DHW temperature setpoint	5... 80 °C		**50 °C**

1.9 Information display

Various data can be displayed by pressing the info button .

Depending on the type of unit, configuration and operating state, some of the info lines listed below may not appear.

- Error messages :
  The display shows the "Bell" symbol .

  ☞ **Consult your heating technician.**

- Service messages ; Special mode messages :
  The display shows the "Key" symbol .

  ☞ **Consult your heating technician.**

Various data (see below).

Designation	*Line*
Floor drying current setpoint .	-
Current drying day.	-
Terminated drying days.	-
State heat pump.	8006
State supplementary source.	8022
State DHW (domestic hot water).	8003
State heating circuit 1.	8000
State cooling circuit 1.	8004
Outdoor temperature.	8700
Room temperature 1.	8740
Room setpoint 1.	
Flow temperature 1.	8743
Flow temperature setpoint1.	
DHW (domestic hot water) temperature.	8830
Heat pump return temperature.	8410
Setpoint (return) HP.	
Heat pump flow temperature.	8412
Setpoint (flow) HP.	

This appliance is marked with this symbol. This means that electrical and electronic products shall not be mixed with general household waste.
European Community countries(*), Norway, Iceland and Liechtenstein should have a dedicated collection system for these products.
Do not try to dismantle the system yourself as this could have harmful effects on your health and on the environment.
The dismantling and treatment of refrigerant, oil and other parts must be done by a qualified installer in accordance with relevant local and national regulations.
This appliance must be treated at a specialized treatment facility for re-use, recycling and other forms of recovery and shall not be disposed of in the municipal waste stream.
Please contact the installer or local authority for more information.
* subject to the national law of each member state

Date of installation :

Contact of your heating technician or your after-sales service.